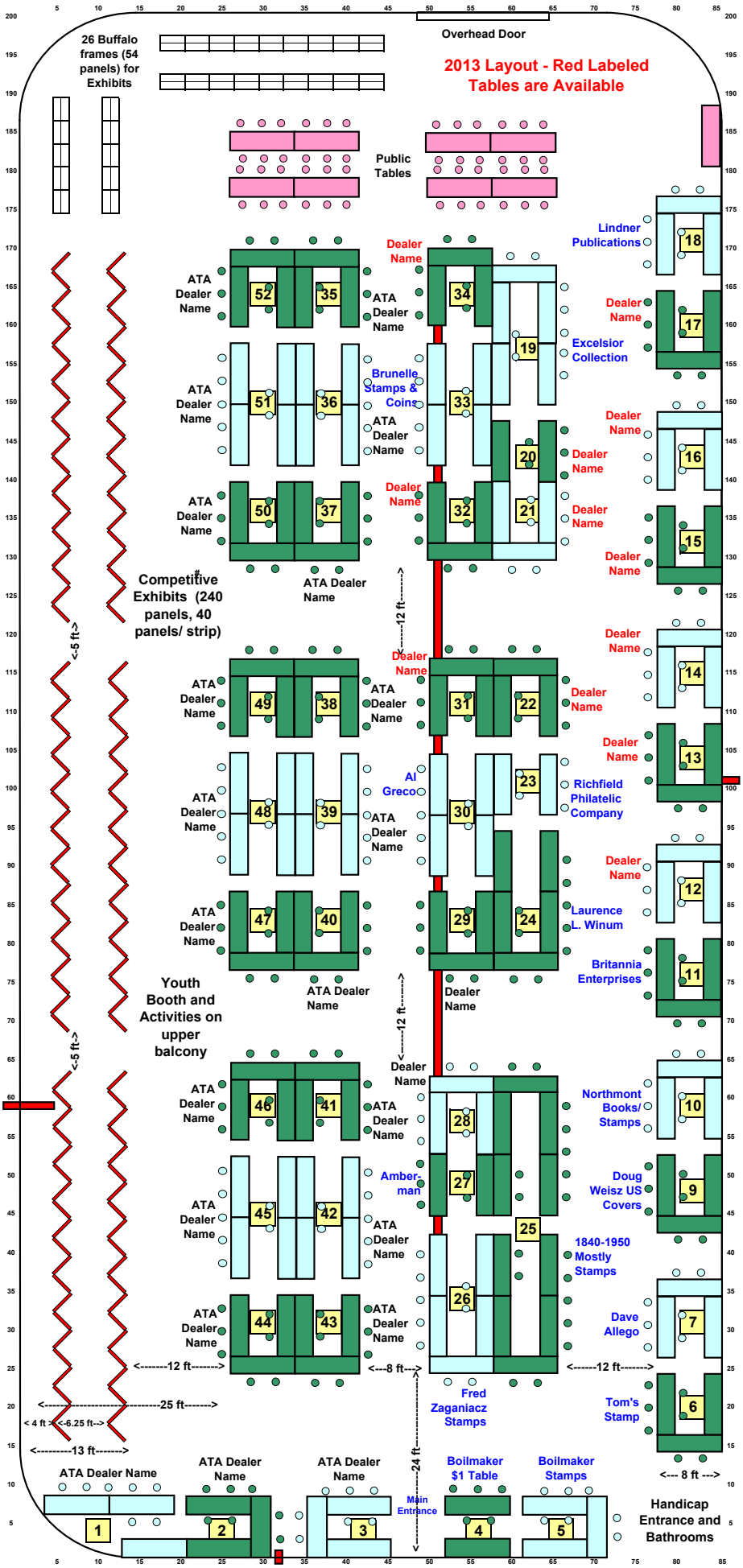
2013 Layout - Red Labeled Tables are Available
Overhead Door
26 Buffalo frames (54 panels) for Exhibits
Public Tables
Competitive Exhibits (240 panels, 40 panels/ strip)
Youth Booth and Activities on upper balcony
ATA Dealer Name
Dealer Name
Lindner Publications
Excelsior Collection
Brunelle Stamps & Coins
Al Greco
Richfield Philatelic Company
Laurence L. Winum
Britannia Enterprises
Northmont Books/ Stamps
Doug Weisz US Covers
Amber-man
1840-1950 Mostly Stamps
Dave Allego
Fred Zaganiacz Stamps
Tom's Stamp
Boilmaker $1 Table
Boilmaker Stamps
Main Entrance
Handicap Entrance and Bathrooms
<-5 ft->
<-----12 ft------->
<-------12 ft-------->
<---8 ft--->
<-------25 ft-------->
< 4 ft >
<-6.25 ft-->
<---------13 ft-------->
<--- 8 ft --->
<-----24 ft----->